Crawler lift - Telescopic

Dealer:

OMMELIFT

Built to last - *ask our users!*

3150 RJ Crawler lift

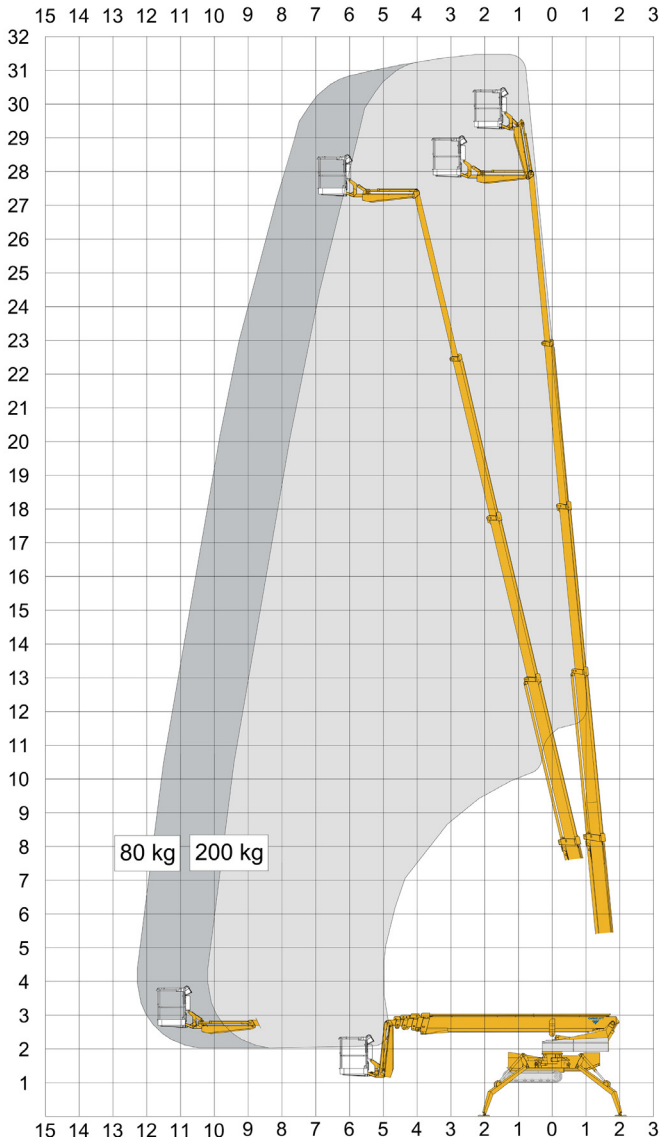
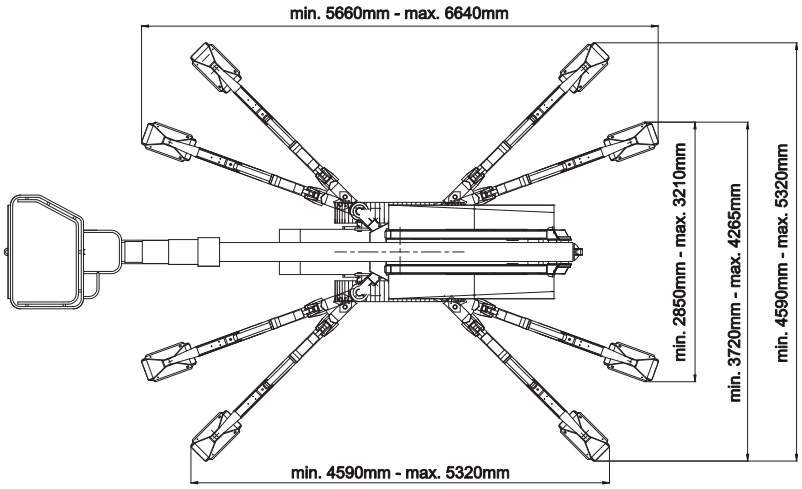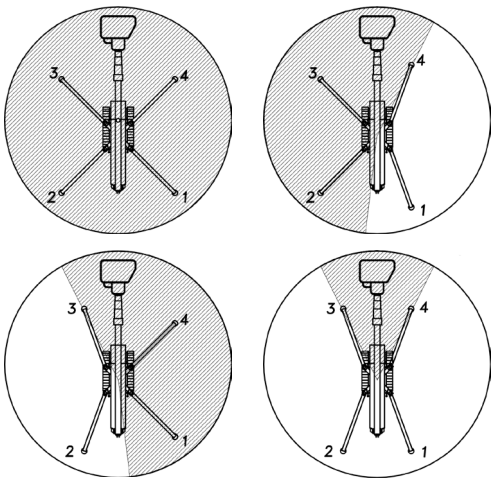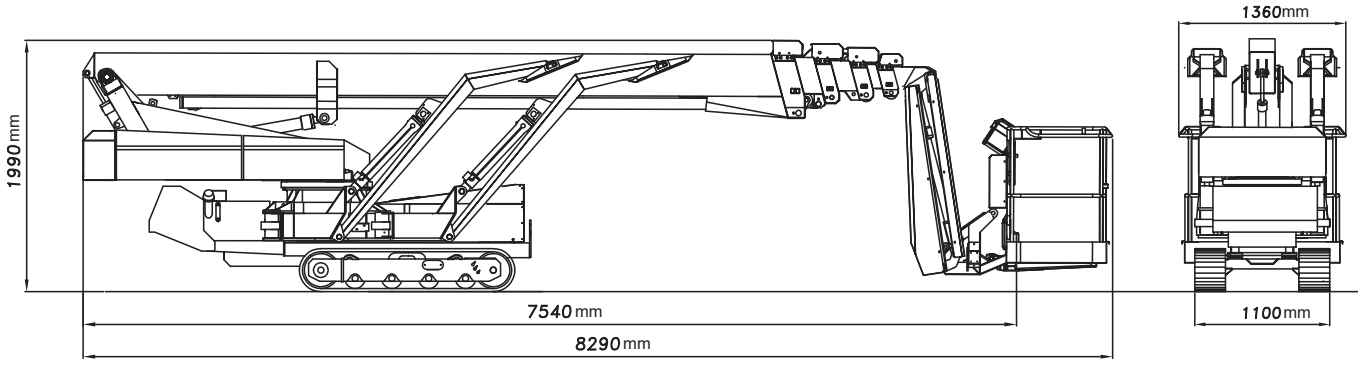
Technical Data:	3150 RBJ	3150 RBDJ
Max. working height	31.1 m	
Max. platform height	29.1 m	
Max. outreach	12.6 m	
Up and over clearance	-	
Angle boom length (boom + basket)	-	
Jib length (jib + basket)	2.7 m	
Vertical jib rotation	90°	
Turret rotation	± 355°	
Basket rotation	± 41°	
Max. basket load	200 kg	
Basket size (detachable)	1.25 x 0.8 x 1.1 m	
Stabilizer pad size	0.28 x 0.44 m	
[6]Diesel	**BATTERY**	**[6]HYBRID**
Engine		14kW/18.8hp
Fuel tank capacity		23 l
Generator		24 V / 22 A
Battery pack	24V/400Ah/5h	24V/200Ah/5h
Charger	24 V / 30 A	24 V / 30 A
Double charger system	Standard	Optional
Elec. descent from basket		
See www.ommelift.com for more features and options		
Gradeability, max. accross slope	25% (14.0°)	
Gradeability, max. up and down slope	35% (19.3°)	
Set-up ability on uneven ground	40% (21.8°)	
Crawler track length	1.76 m	
[1]Undercarriage in Wide [2]Undercarriage in Narrow [3]Wide set-up [4]Wide/Narrow set-up		
Total weight	4000 kg	4000 kg
[1]Live load in transit position	386 kg/m²	386 kg/m²
[2]Live load in transit position	386 kg/m²	386 kg/m²
[3]Live load in working position	199 kg/m²	199 kg/m²
[4]Live load in working position	246 kg/m²	246 kg/m²
Ground pressure, tracks	0.57 kg/cm²	0.57 kg/cm²
(Hard surface)	(2.00 kg/cm²)	(2.00 kg/cm²)
Ground pressure, outrigger pad	2.05 kg/cm²	2.05 kg/cm²
Max. force, outrigger	25.3 kN	25.3 kN